MICRO SWITCH
a Honeywell Division
FED. MFG. CODE 91929

SWITCH – ENCLOSED

CATALOG LISTING
BAF1-2RQ9-RH
(RIGHT HAND)

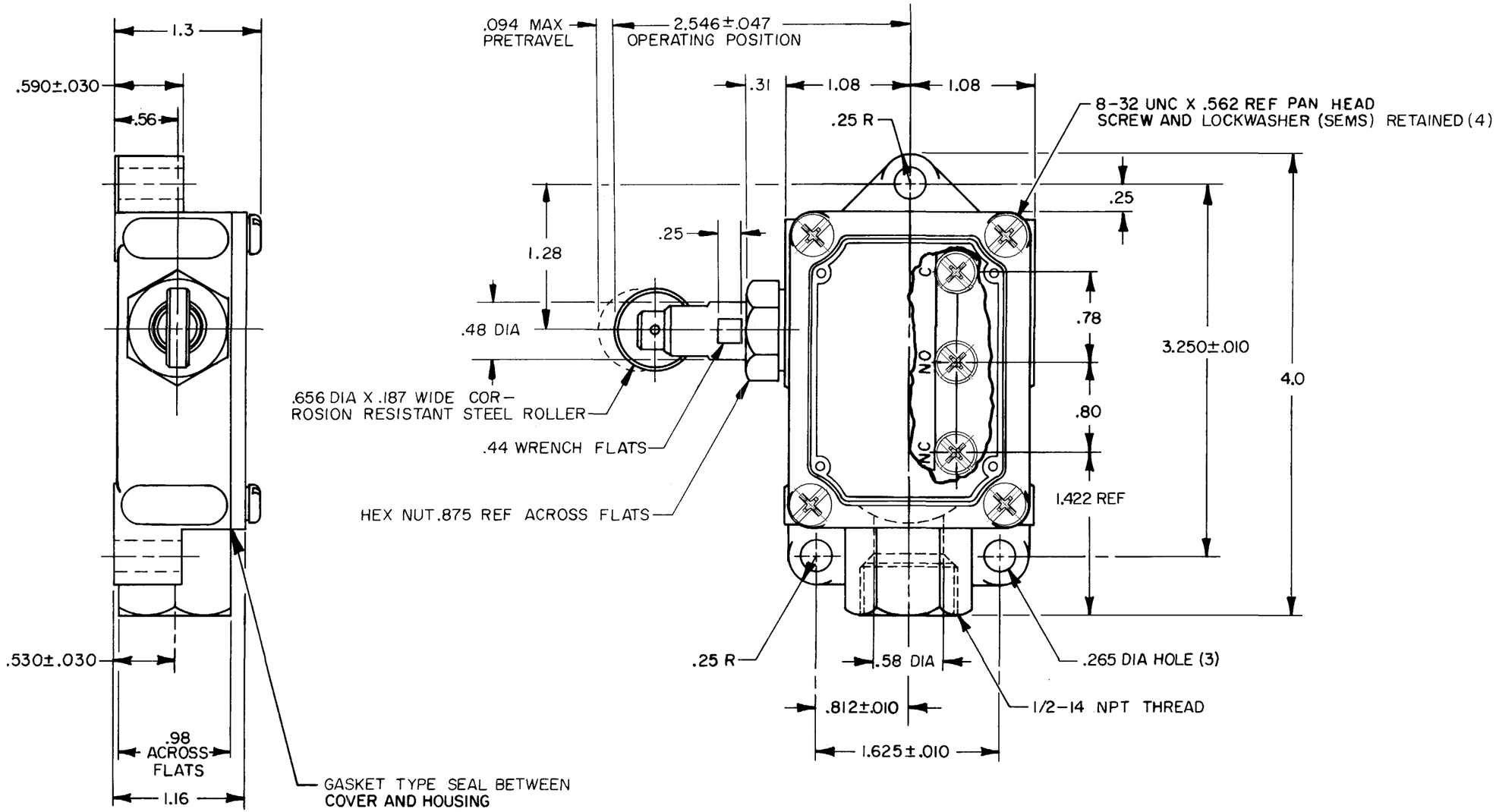

THIS DRAWING COVERS A PROPRIETARY ITEM AND IS THE PROPERTY OF MICRO SWITCH, A DIVISION OF HONEYWELL. THIS DRAWING IS NOT TO BE COPIED OR USED WITHOUT THE APPROVAL OF MICRO SWITCH

THIRD ANGLE PROJECTION

SCALE FULL

DO NOT SCALE PRINT

CHARACTERISTICS	
OPERATING FORCE	2 1/2 LB MAX
RELEASE FORCE	3/4 LB MIN
DIFFERENTIAL TRAVEL	.010 MAX
OVERTRAVEL	.156 MIN
SWITCH-BASIC RELACEMENT	BA-2R708-P7

ELECTRICAL DATA

CONTACT ARRANGEMENT
S P D T

L23
20A 125, 250 OR 480 VAC
10A 125 VAC "L"
1HP 125 VAC, 2HP 250 VAC
1/2A 125 VDC, 1/4A 250 VDC

UNLESS OTHERWISE SPECIFIED TOLERANCES ARE

ONE PLACE	(.0)	±.030
TWO PLACE	(.00)	±.015
THREE PLACE	(.000)	±.005
ANGLES		±

WEIGHT .550 LB

NOTES
1 - ROLLER PLUNGER ASSEMBLY MAY BE SET AT ANY POSITION AROUND AXIS OF PLUNGER
2 – 8-32 UNC X (.219) BINDER HEAD, COMBINATION, TERMINAL SCREWS AND CUPWASHERS

CATALOG LISTING BAF1-2RQ9-RH
PAGE 1 OF 1
ISSUE 17
REPLACES
RELEASE NO.
CHECK
REVISIONS
A CO-73287M GJW 15MAY95
CHECK 25 MAY 95 JJA
CHECK 15 MAY 95 GJW
DRAWN
FORMTEK